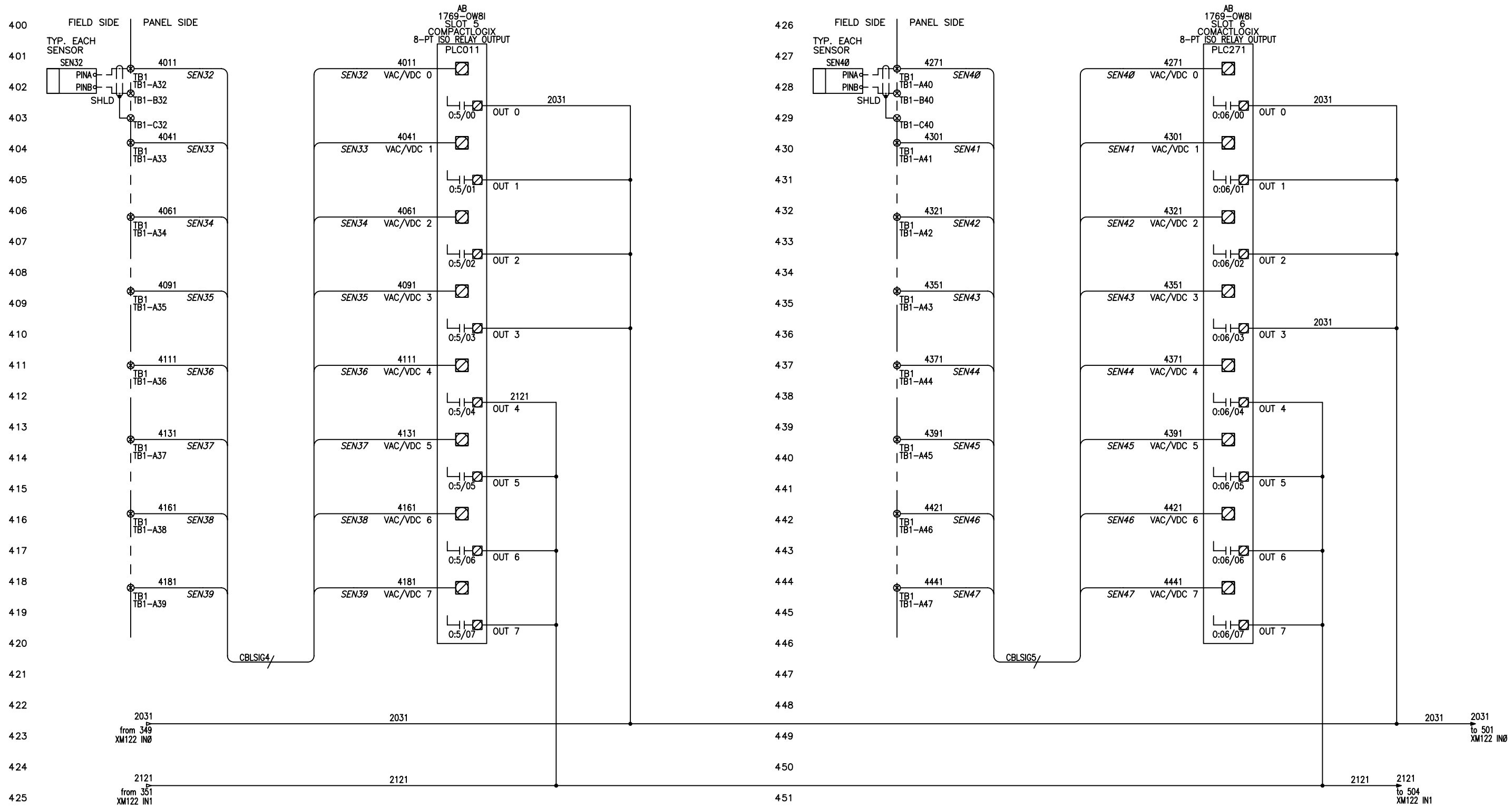

NOTE:
1.) CABLES SIGX RTB's 1492-CAB005RTN18
2.) ALL WIRES BLU 18AWG UNLESS OTHERWISE SPECIFIED

THIS DRAWING IS THE PROPERTY OF ROCKWELL AUTOMATION, INC. OR ITS SUBSIDIARIES AND MAY NOT BE COPIED, USED OR DISCLOSED FOR ANY PURPOSE EXCEPT AS AUTHORIZED IN WRITING BY ROCKWELL AUTOMATION, INC.

Rockwell Automation
Global Manufacturing Solutions

DYNAMIX 1000 SEQUENTIAL MONITORING PANEL LAYOUT FOR 48 PTS

DRAWN PAL | DATE 07/27/08
DWG NO EXAMPLE WIRING | DWG REV 0
SHEET 5 OF 7

CAD PART DYNAMIX_1000_SEQUENTIAL_48PT_pg5.DWG
LAYERING SELECT: ECHO